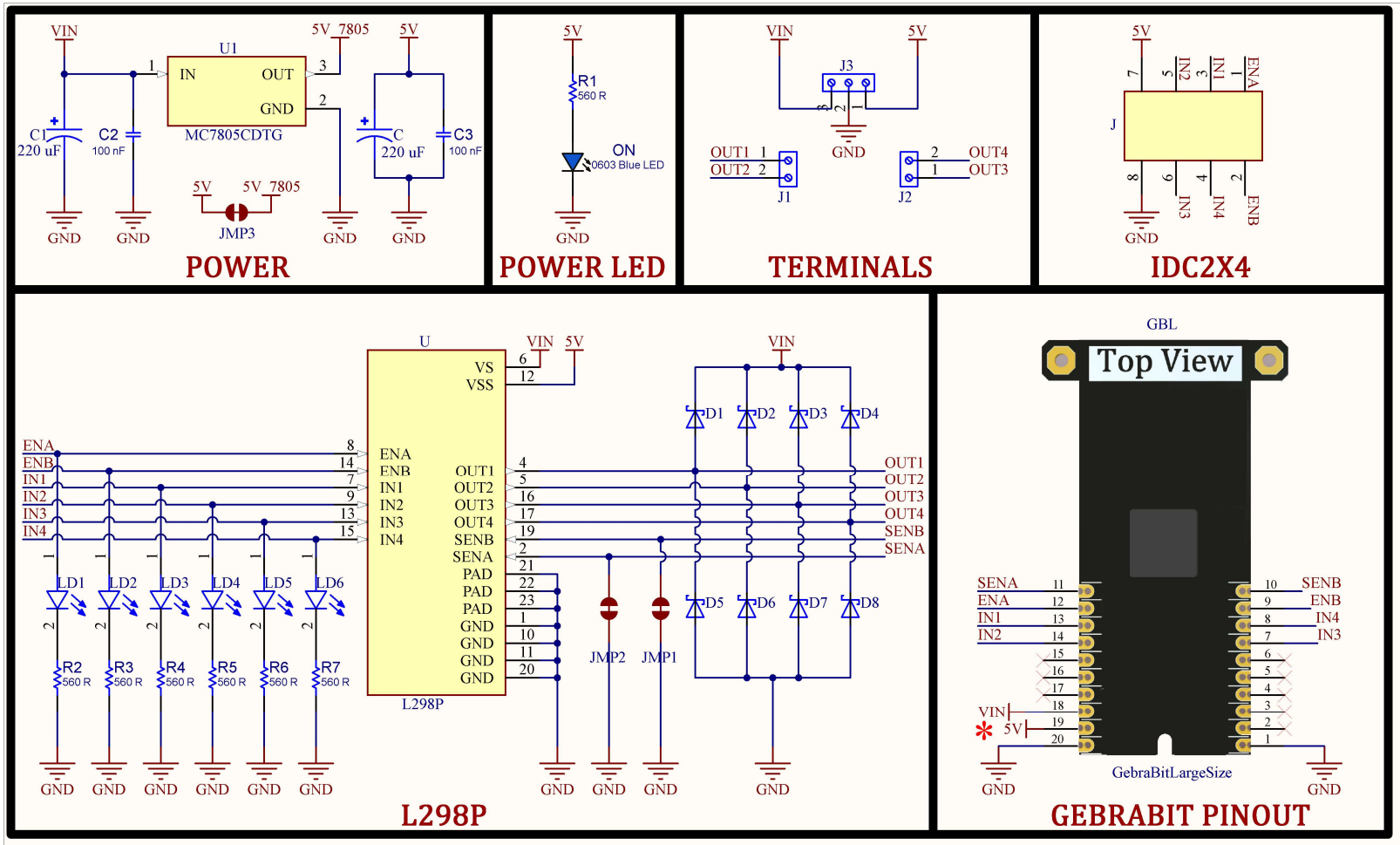

*Note:5V Pins are Output if "JMP3" is shorted

GebraBit

HTTPS://GEBRABIT.COM/

Title:	GebraBit L298P Circuits	Variant: [No Variations]	
Page Contents:	GebraBit L298P Circuits	Checked by: M.Z	
Size: Large	SKU CODE: GB801DM		Revision: V2.0
Date: 10/03/2022	Designed by: GEBRABIT	Sheet 1	of 1